RCS

# Model ZCV2

# 2 ZONE HVAC CONTROL UNIT

## Wiring Diagram

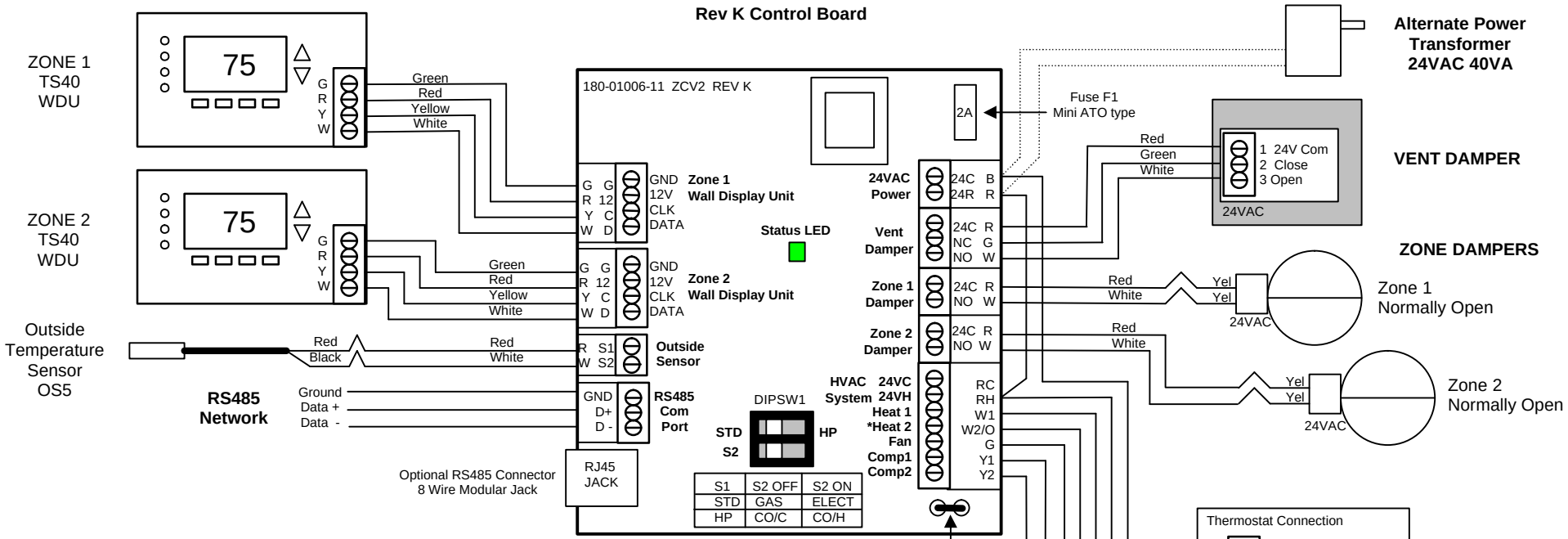


| S1 | S2 OFF | S2 ON |
|---|---|---|
| STD | GAS | ELECT |
| HP | CO/C | CO/H |

### HVAC System Setup – Dipswitch SW1

| DIPSWITCH | HVAC SYSTEM SETUP | | |
|---|---|---|---|
| **S1** | **Sets HVAC System Type** | | **Position** |
| | STD - Standard System | Set S1 OFF (default) | Left |
| | HP - HP System | Set S1 ON | Right |
| **S2** | **If S1= Standard System – Sets Fan Type** | | |
| | Gas System | Set S2 OFF (default) | Left |
| | Electric System | Set S2 ON | Right |
| **S2** | **If S1 = HP System – Sets Changeover (CO) ValveType** | | |
| | CO with Cool | Set S2 OFF (default) | Left |
| | CO with Heat | Set S2 ON | Right |

DCN 148-01006-11 7/13/06